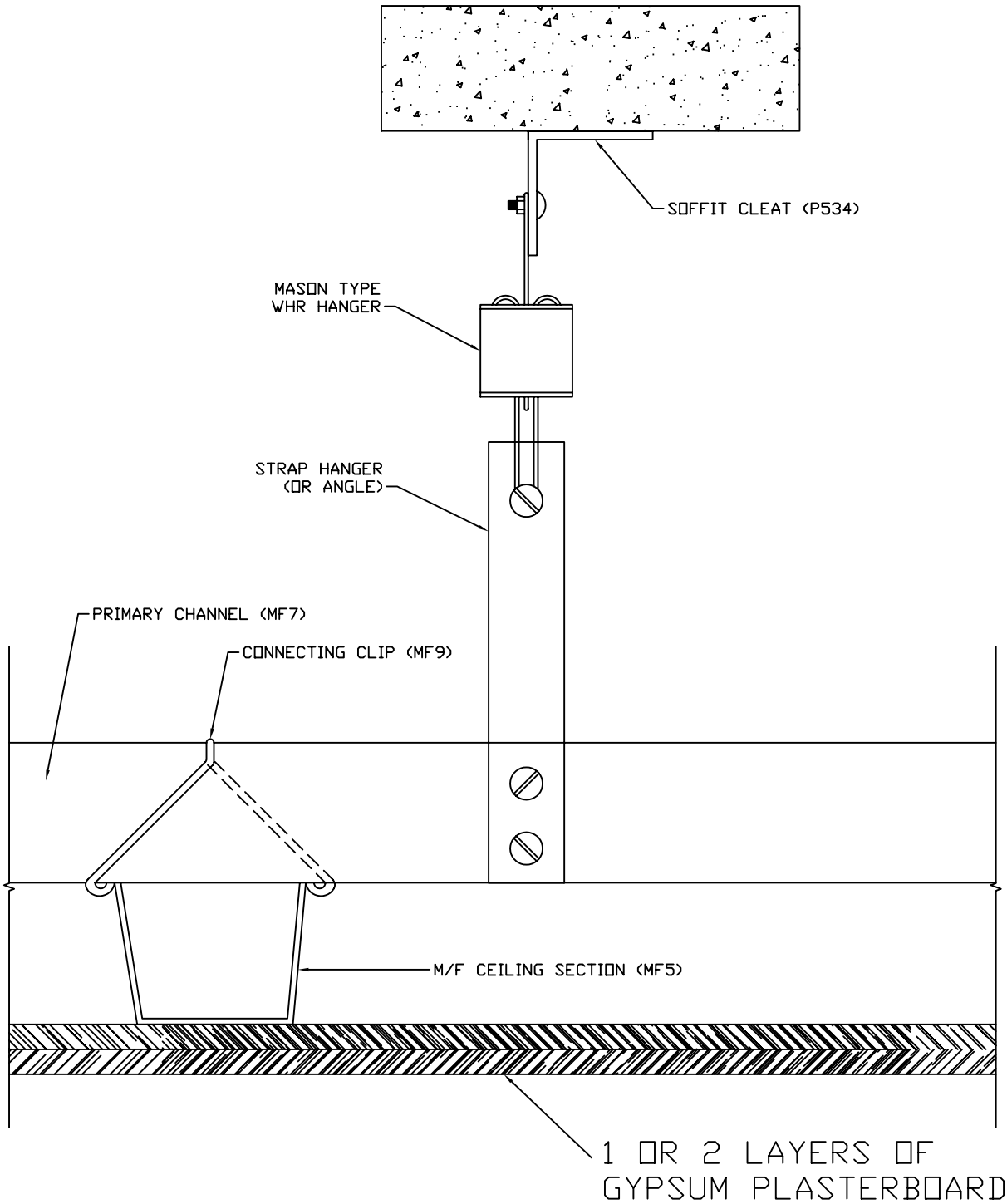

Mason U.K. Ltd.
Unit 6, Abbey Business Park, Monks Walk, Farnham, Surrey, GU9 8HT
Tel: 01252 716610 Fax: 01252 716630 e-mail: info@mason-uk.co.uk