MASON INDUSTRIES, Inc.
Manufacturers of Vibration Control Products
350 Rabro Drive
Hauppauge, NY 11788
631/348-0282
FAX 631/348-0279
2101 W. Crescent Ave., Suite D
Anaheim, CA 92801
714/535-2727
FAX 714/535-5738
Info@Mason-Ind.com • www.Mason-Ind.com

JOB NAME _____
CUSTOMER _____
CUSTOMER P.O. _____
MASON M. _____
DWG No. _____

MFS

1" (25mm) Deflection
B Series
Spring Floor Mount

TYPE MFS RATINGS

Size	Rated Capacity (lbs)	*(Kgs)*	Rated Deflection (in)	*(mm)*	Spring Constant (lbs/in)	*(Kg/mm)*	Spring Color
MFS-B-138	138	*63*	1.32	*34*	105	*1.85*	White
MFS-B-222	222	*101*	1.16	*29*	191	*3.48*	Blue
MFS-B-278	278	*126*	1.09	*28*	255	*4.50*	Purple
MFS-B-336	336	*152*	1.00	*25*	336	*6.08*	Silver
MFS-B-410	410	*186*	1.07	*27*	385	*6.89*	Black
MFS-B-540	540	*245*	1.00	*25*	540	*9.80*	Yellow

Springs have additional travel to solid equal to 50% of the Rated Deflection.

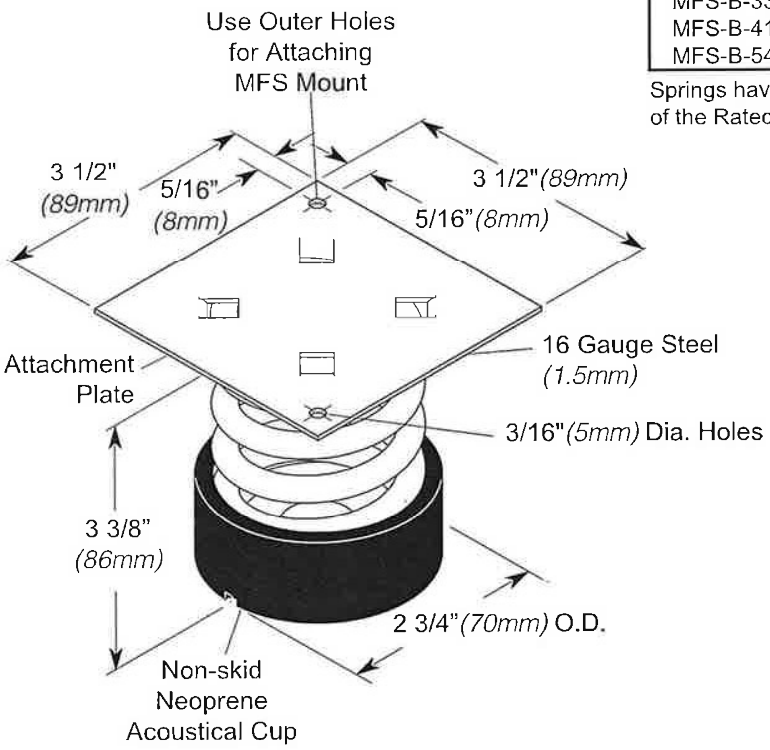

SPRING DATA

Spring OD (in)	*(mm)*	Free Ht. (in)	*(mm)*	Ratio Kx/Ky	Ratio OD/OH
2 3/8	*60*	2 7/8	*73*	1.20	1.27-1.53

CERTIFICATION DATA

_____ **SPECIFIED DEFLECTION**

MASON LAYOUT DRAWING NO. _____

SIZE	QTY.	TAG

Certification Form S-031 01/2019	DWN	CHKD	DATE	DWG No.